Data sheet

Modulating Controlled Electric Actuators
For AB-QM, Pressure Independent Control Valve
AME 10, AME 13 Series

AME 10

AME 13 SU/ SD

Features:

The AME 10 and AME 13 are low voltage powered actuators that receive a proportional input signal. This series of actuators are available with or without spring return function that are installed on the pressure independent control valve AB-QM. The spring return function of the AME provides a safety shut off of the valve in the event of power failure. In addition to basic functions such as manual control and position indication, the actuators are also equipped with force sensitive switch-off to ensure that the actuator and valve are not exposed to overload. The input signal is applied over the entire travel of the actuator.

Ordering:

Code No.	Style	Description	Signal	Run Time
082G3005	AME 10	Electronic actuator	Modulating	11.75 s/mm
003Z0257	Spacer required for AME 10			
082G3006	AME 13SD	Electric actuator w/ safety spring down function		
003Z0257	Spacer required for AME 13SD			
082H3044	AME 13SU	Electric actuator w/ safety spring up function		
003Z3960	Adapter required for AME13SU			

Technical Data:

Type	AME 10	AME 13SD	AME 13SU
Power supply	24 VAC, +10…-15%		
Power consumption	2 VA	9 VA	9 VA
Frequency	50 Hz / 60 Hz		
Control input	0…10V (2…10V) 0…20mA (4…20mA)		
Output signal	0…10V (2…10V)		
Spring return function	-	Spring down	Spring up
Actuator force	67.4 lbf (300N)		
Max. stroke	5mm		5.5mm
Speed	11.75 s/mm		
Max. medium temperature	266°F (130°C)		
Enclosure rating	NEMA 2		
Weight	1.3 lb (0.6 kg)	1.8 lb (0.8 kg)	

Data sheet

Modulating Controlled Electric Actuators
For AB-QM, Pressure Independent Control Valve
AME 10, AME 13 Series

Installation Orientation:

The actuator should be mounted with the valve stem in either horizontal position or pointing upwards. The actuator is fixed to the valve body by means of a mounting ring which is tightened by hand and requires no additional tools for mounting. Prior to wiring the valve it is recommended that the actuator is mounted.

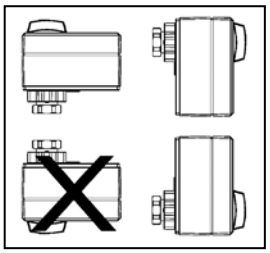

Dimensions:

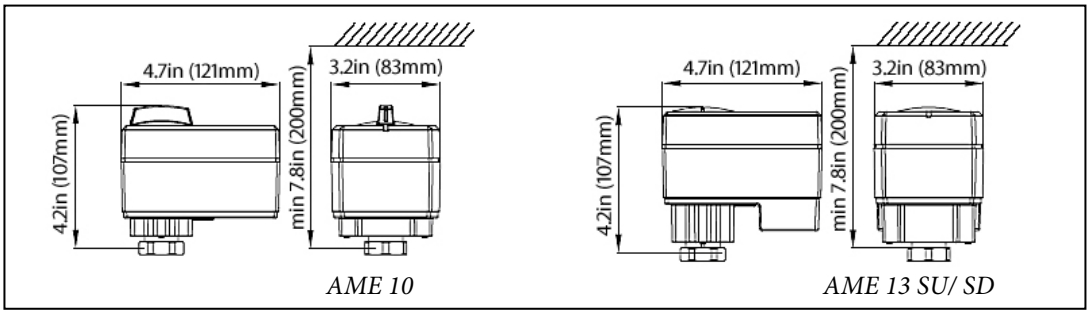

Electrical Wiring:

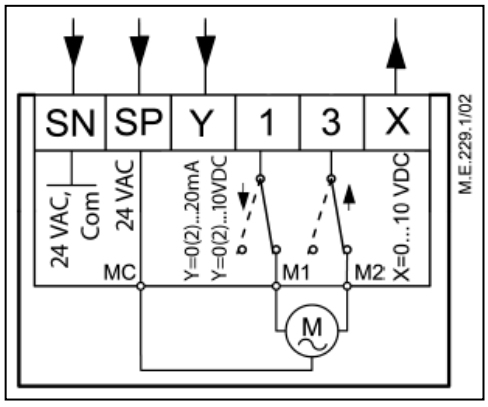

SP 24 V~.....Power supply
SN 24 V~.....Common
Y 0 to 10 V.....Input signal
(2 to 10 V)
0 to 20 mA
(4 to 20 mA)
X 0 to 10 V..... Output signal
(2 to 10 V)

Excessive Actuator Travel

The actuator is equipped with force sensitive switch-off to ensure that the actuator and valve are not exposed to overloading through excessive travel. During calibration the actuator will find the bottom of it travel and will apply the input across the entire travel of the actuator.

Diagnostic LED

The red diagnostic LED is located on the pcb under the cover. It provides indication of three operational states: Actuator Healthy (Permanently ON), Self Stroking (Flashes once per second), Error (Flashes 3 times per second - seek technical assistance).

VDCVX422©Danfoss 6/2016

Data sheet

Modulating Controlled Electric Actuators For AB-QM, Pressure Independent Control Valve AME 10, AME 13 Series

AME DIP switches:

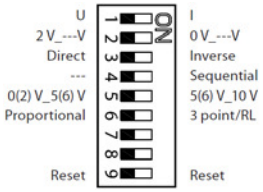

The switch provides the following functions:

• **SW1: U/I - Input signal type selector:**
If set to OFF position, voltage input is selected. If set to ON position, current input is selected.

• **SW2: 0/2 - Input signal range selector:**
If set to OFF position, the input signal is in the range from 2 V to 10 V (voltage input) or from 4 mA to 20 mA (current input). If set to ON position, the input signal is in the range from 0 to 10 V (voltage input) or from 0 mA to 20 mA (current input).

• **SW3: D/I - Direct or Reverse acting selector:**
If set to OFF position, the actuator is direct acting (stem lowers as voltage increases). If actuator is set to ON position the actuator is reverse acting (stem raises as voltage increases).

• **SW4: —/Seq - Input signal range in sequential mode:**
If set to OFF position, the actuator is working in range 0(2)…10 V or 0(4)…20 mA. If set to ON position, the actuator is working in sequential range; 0(2)…5 (6) V or (0(4)…10 (12) mA) or (5(6)…10 V) or (10(12)…20 mA).

• **SW5: 0…5V/5…10V - Normal or sequential mode selector:**
If set to OFF position, the actuator is working in sequential range 0(2)…5 (6) V or 0(4)…10 (12) mA.
If set to ON position, the actuator is working in sequential range; 5(6)…10 V or 10(12)…20 mA.

• **SW6: Proportional / 3-point floating**
The actuator can function as a 3-point floating actuator if DIP switch is in the ON position. Power supply should be connected to SN and SP ports. On port 1 or 3 24VAC signal is provided to raise or lower the actuator.

• **SW7:** Not used

• **SW8:** Not used

• **SW9: Reset:**
Changing this switch position will cause the actuator to go through a self-calibration cycle.

Manual Override:

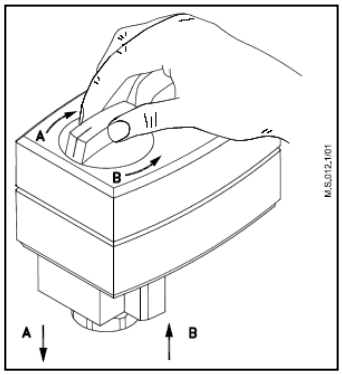

AME 10

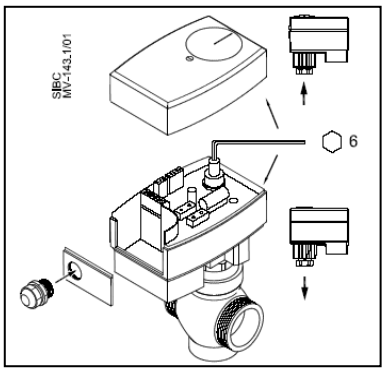

AME 13 SD/ SU

Manual override is achieved by disconnecting the power supply, removing the cover and inserting a 6 mm Allen key into the top of the positioning spindle and turning the key against the spring. Observe the direction of rotation symbol. To hold a manual override position, the key must be wedged.

If manual override has been used then X and Y signal will not be correct until the actuator reaches its end position. Another alternative to correct this is to reset the actuator.

Danfoss can accept no responsibility for possible errors in printed materials and reserves the right to alter its products without notice. All trademarks in this material are property of the respective companies. Danfoss and Danfoss logotype are trademarks of Danfoss A/S. All right reserved.

Danfoss
Baltimore, MD USA / Mississauga, ON CANADA
Tel: 866-375-4822 Fax: 416-352-5981
www.ABQMvalves.com